WOODBRIDGE®

DIMENSIONS/TECHNICAL DATA

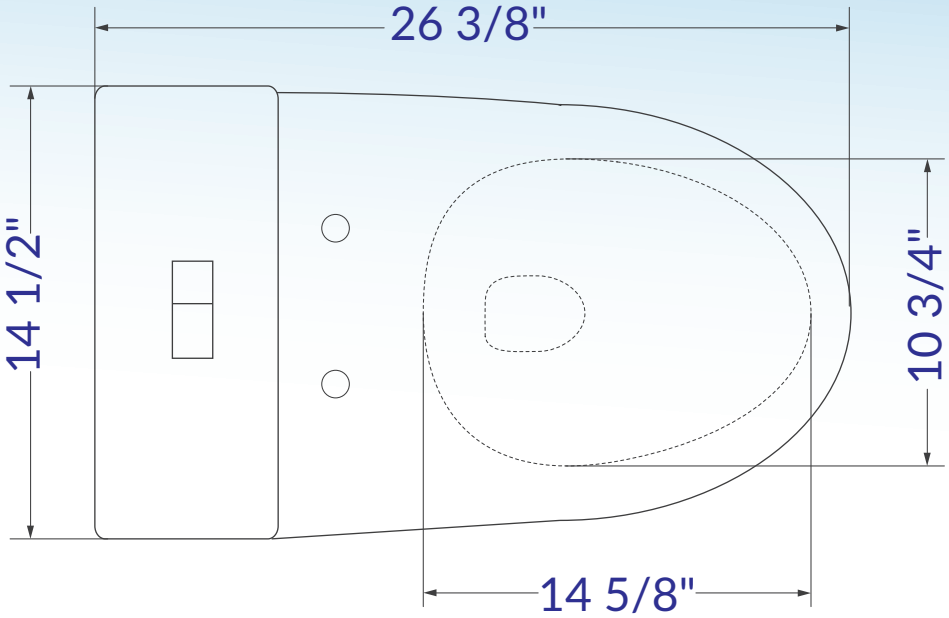

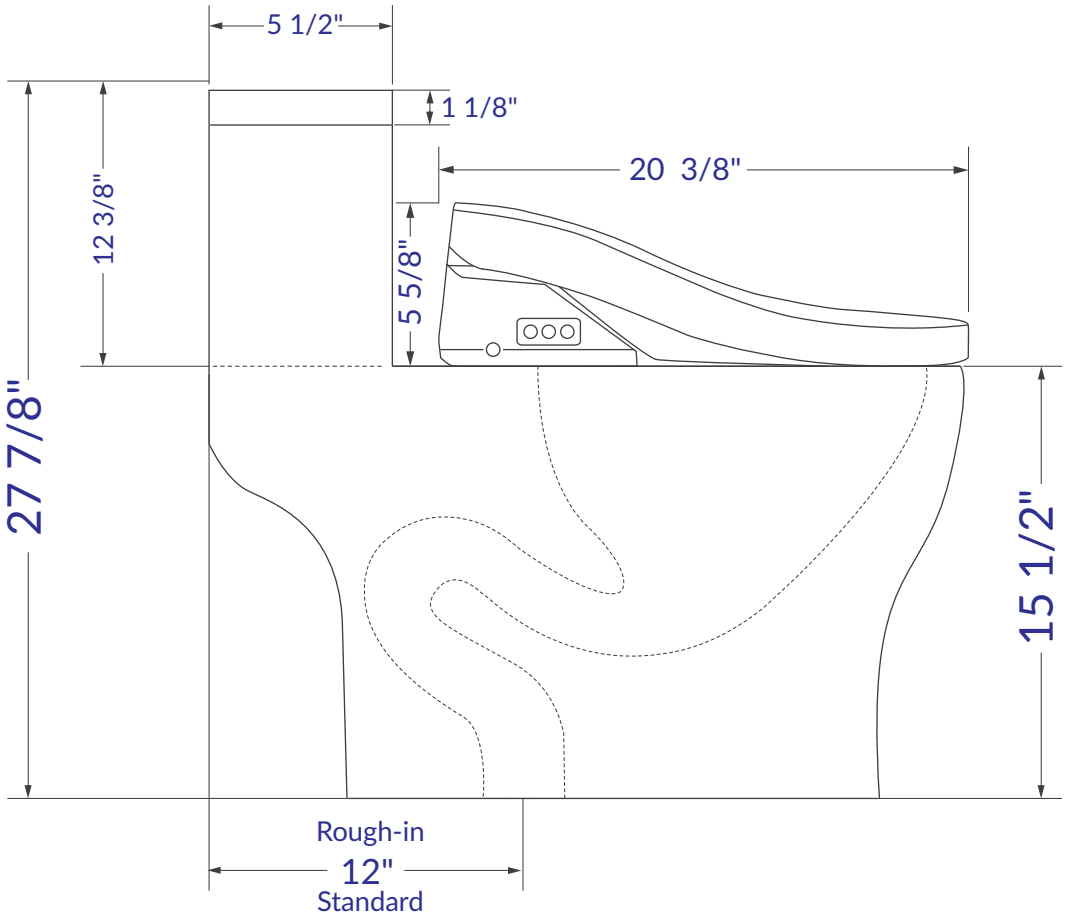

ATTENTION! Dimensions may vary by up to 3/8". It is highly recommended to pull all dimensions of actual model for installation and measuring purposes.