WOODBRIDGE®
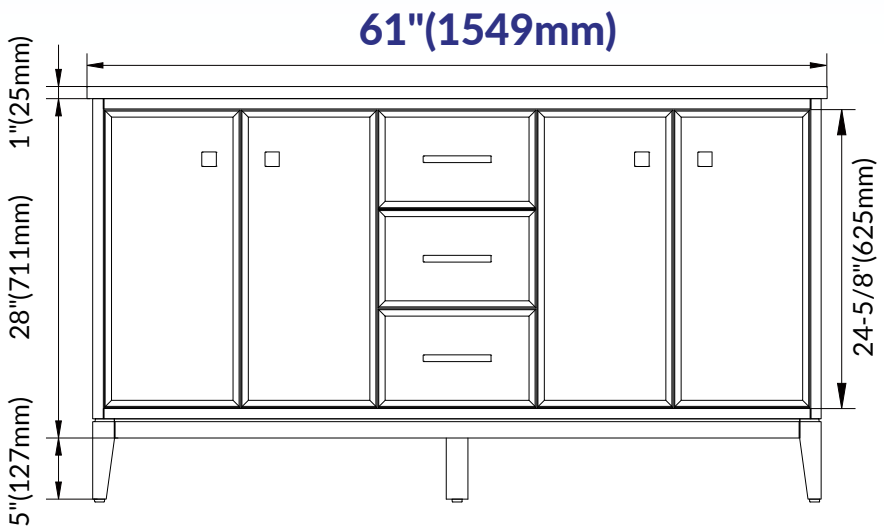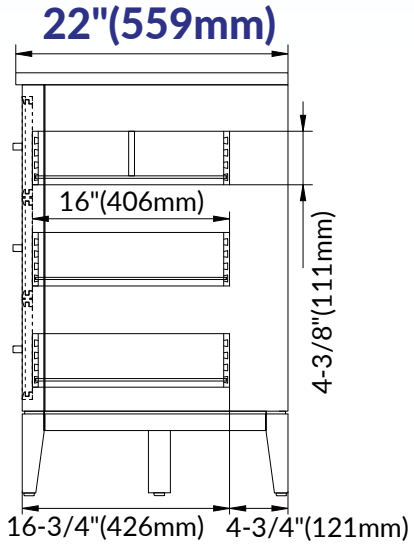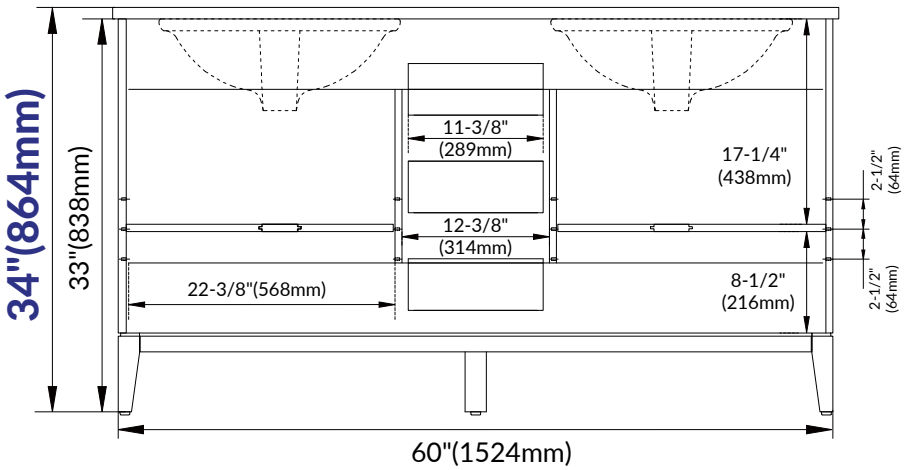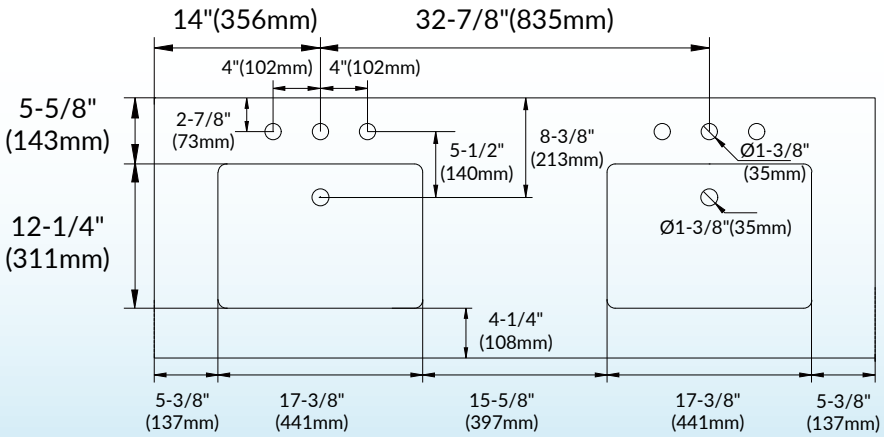
Lyon-61-D-WH-CW
Lyon-61-D-AG-CW
Lyon-61-D-NO-CW